Alvium 1800 U

Alvium 1800 U-2460

Alvium 1800 U-2460 innovative USB camera with Sony IMX540 global shutter sensor provides industrial performance for cost effective embedded and machine vision applications.

General

Model:	Alvium 1800 U-2460
Product series:	Alvium 1800 U
Status:	Available

Sensor

Sensor type:	Area scan
Chroma:	Mono or Color
Spectrum:	Visible
Spectral range:	300 nm to 1100 nm
Resolution:	5,328 × 4,608 (24.60 MP)
Sensor model:	Sony IMX540
Sensor architecture (material):	CMOS
Shutter type(s):	Global Shutter
Sensor size:	21.43 mm diagonal (Type 1.2)
Pixel size:	2.74 µm × 2.74 µm

Pixel formats

Sensor bit depth:	12-bit
Monochrome pixel formats:	Mono8, Mono10, Mono10p, Mono12, Mono12p
YUV pixel formats:	YCbCr411_8_CbYYCrYY, YCbCr422_8_CbYCrY, YCbCr8_CbYCr

Pixel formats

RGB pixel formats:	RGB8 (default), BGR8
Bayer pixel formats:	BayerRG8, BayerRG10, BayerRG10p, BayerRG12, BayerRG12p
Output color space:	12-bit

Imaging performance

Quantum efficiency @ 529 nm:	68 %

Timing and gain

Max. frame rate:	17 fps

I/Os and power

Non-isolated lines:	4 programmable GPIOs
Power supply:	Power over USB 3.1 Gen 1 | External power 5.0 V
Power consumption:	USB power: 4.0 W (typical) | Ext. power: 4.2 W (typical)

Operating conditions

Operating temperature (housing):	-20 °C to 65 °C (housing)

Mechanical properties

Body dimensions (L x W x H in mm):	38 × 29 × 29
Lens mount(s):	C-Mount, CS-Mount
Weight:	65 g

On-board memory and FPGA

Image buffer (RAM):	256 KByte
Non-volatile memory (Flash):	1024 KByte

Interfaces

Digital interface:	USB3 Vision

Quantum Efficiency

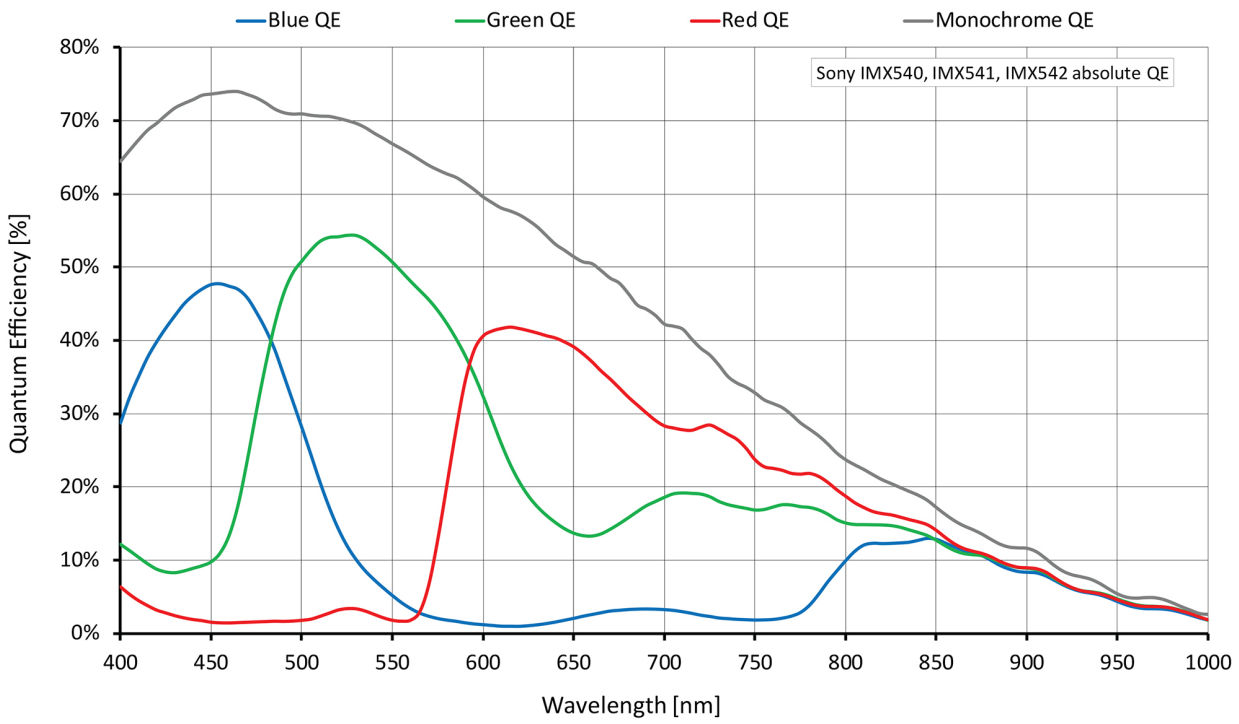
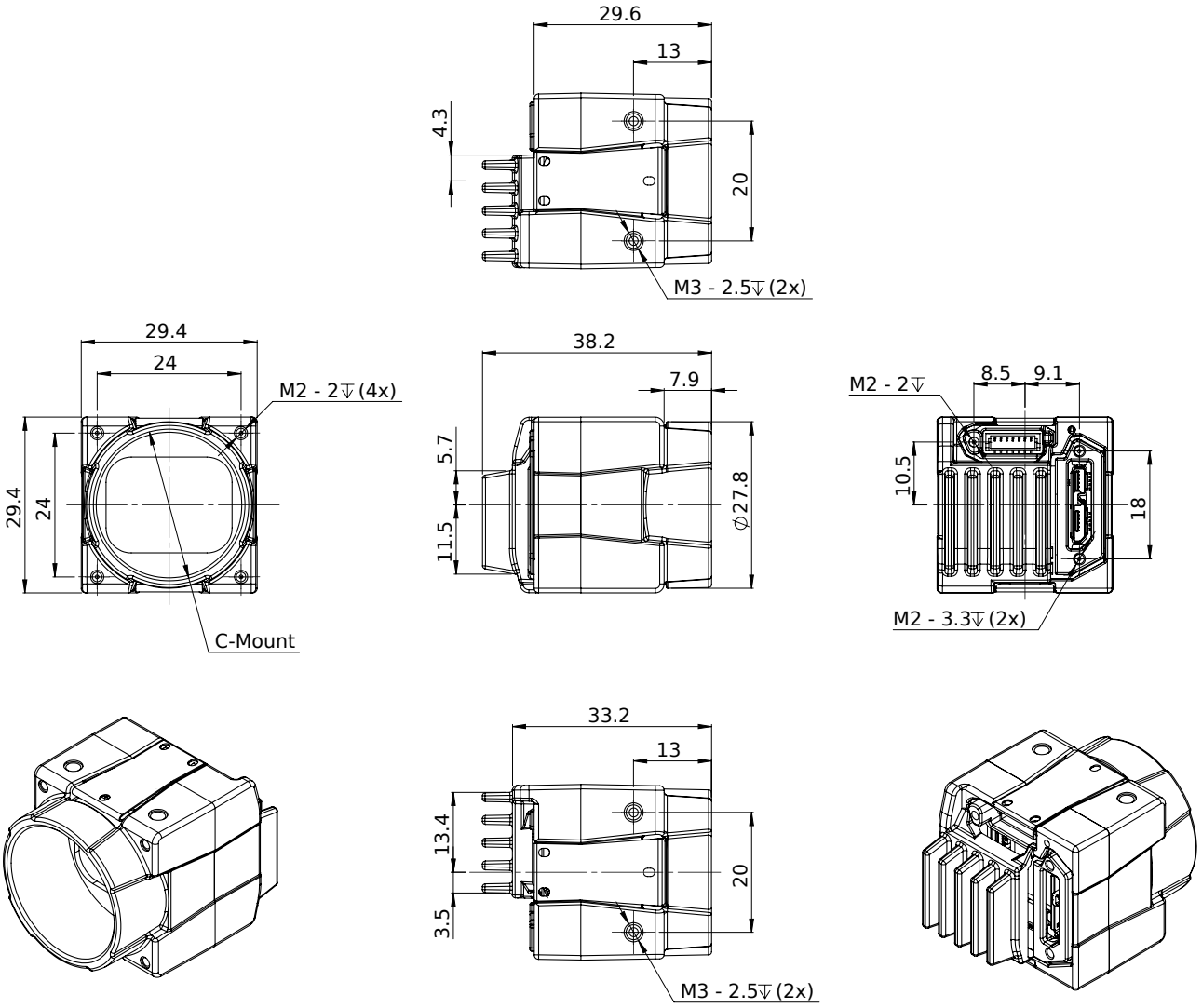
Technical Drawing